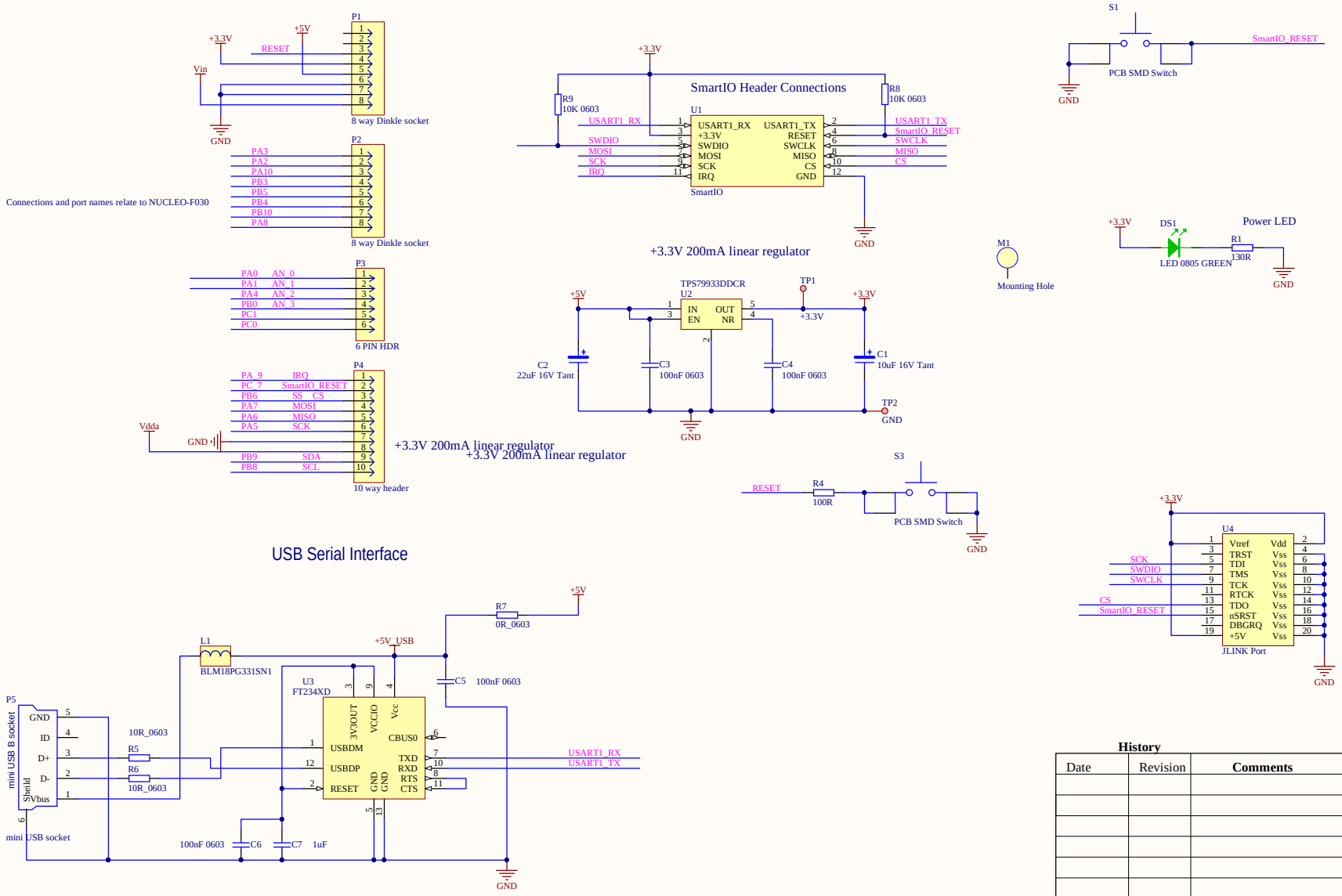

History

Date	Revision	Comments
	A	

Title **Schematic Document**			**Extron Design Services**
Size: A3	Number:56570	Revision:	
Date: 19-Jun-17	Time: 8:53:10	Sheet4 of 5	
File: R:\RandDClient\Imagecraft\56620 SmartIO Shield\Development\sch_pcb\Rev C\Connectors.SchDoc			